Train the painter

Delivery Model

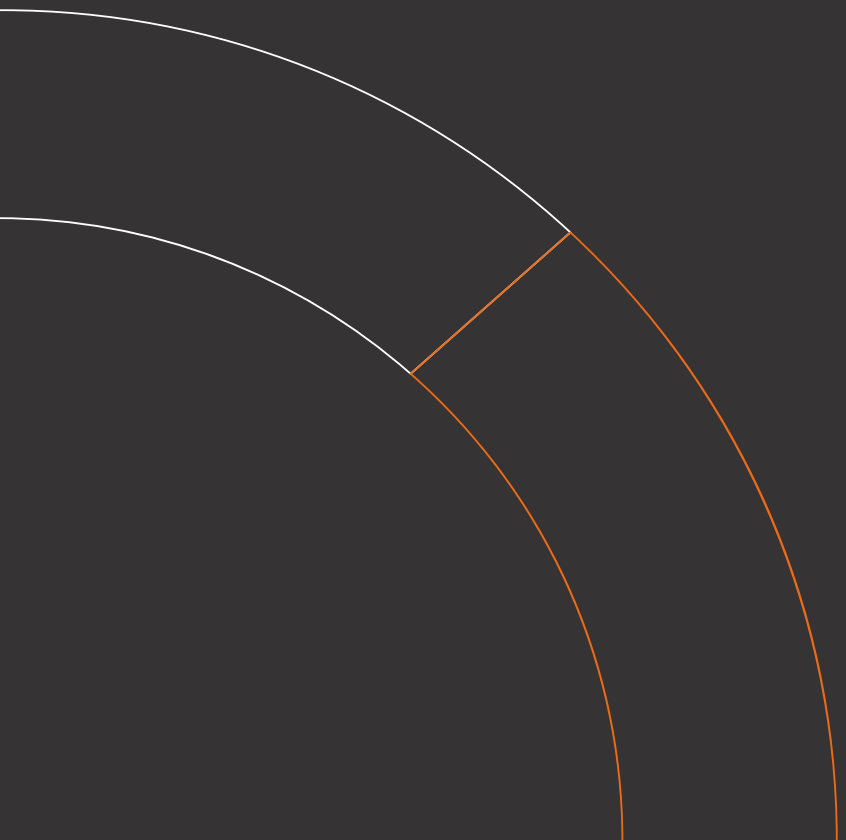

corrodere academy

What is Train the painter?

Train the painter is the world's leading, industry-recognised, and fully accredited **Industrial Coating Applicator Training Programme.**

- Operate as an independent training centre, or use the programme to train Coating Operatives within your company.
- Delivered internally by Approved Trainers who have completed the Train the Trainer course.
- Accessible through a state-of-the-art online training platform with comprehensive training guidelines.
- Accredited training certificates are applied for directly via the platform.

Learn more about the products and delivery model in this brochure.

BENEFITS

- Global accessibility – our courses can be studied online or face to face from anywhere in the world
- Our learning platform offers a full portfolio of courses supported with videos, animations and voice overs
- Affordable and flexible training model
- Globally recognised and accredited
- Dedicated customer service team

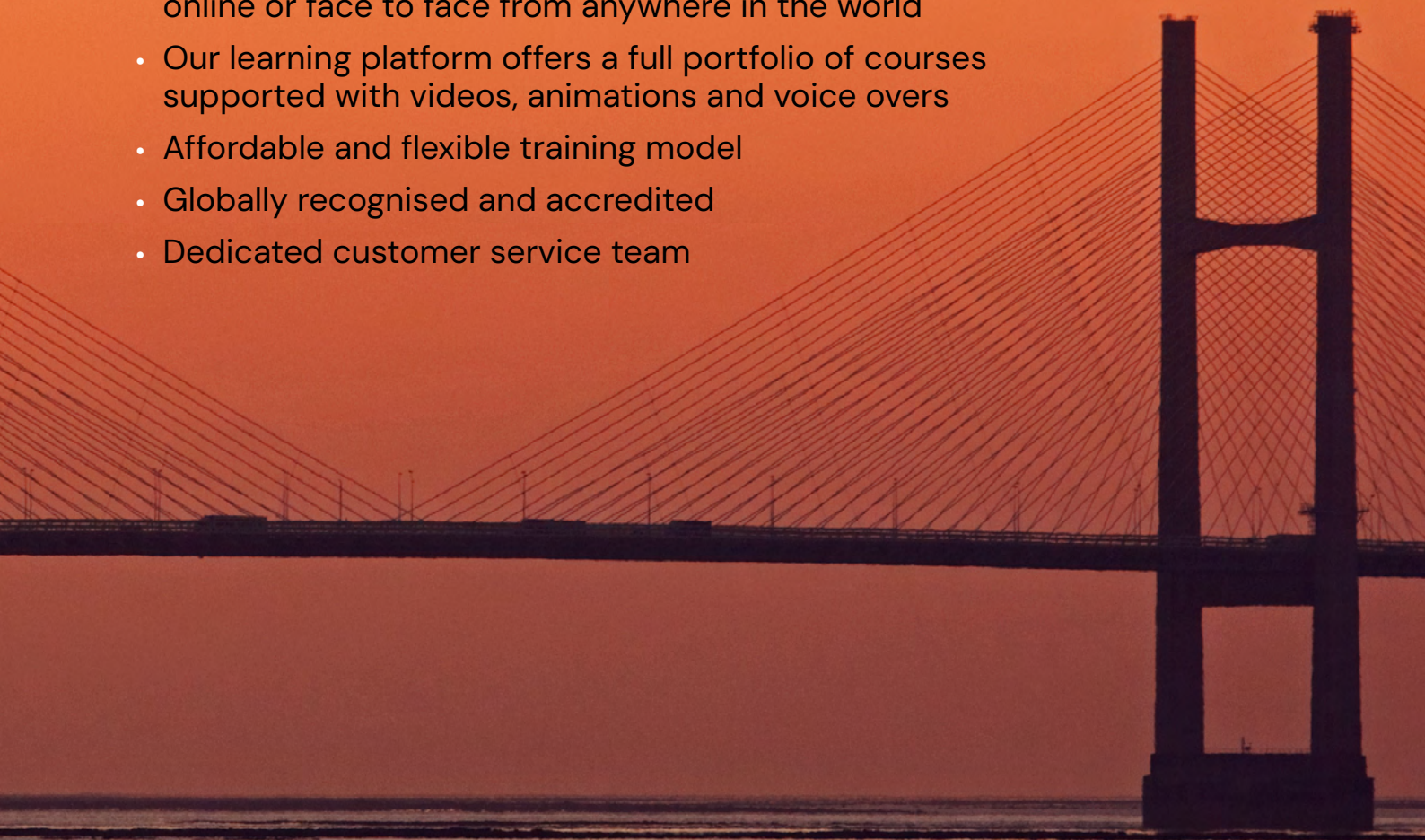

Contact us: +44 (0)1252 732 236 ■ info@corrodere.com ■ corrodere.com

Contents

4 Annual Membership Options
5 Training Equipment Requirements
7 Practical Assessment Facilities Requirements
8 Train the Trainer
9 Accredited Courses Available
11 Online Course Delivery Model
12 Training Accreditations
13 QCA Certification
18 Encouraging New Talent
19 Price Guide
20 Logbook App
21 Marketing Toolbox

Train the painter

Accredited by:

Lloyd's Register

CSCS

COURSE MATERIALS APPROVED BY: RoSPA

bre

BCF British Coatings Federation

ASFP

TSSEA Thermal Spraying & Surface Engineering Association

TRAIN THE PAINTER IS AVAILABLE ONLINE IN ANY LANGUAGE, INCLUDING:

- United Kingdom
- American
- Portuguese
- Spanish
- Chinese
- Polish
- Dutch
- French
- German
- Hindi
- Thai
- Lithuanian
- Czech
- French Canadian
- Romanian
- Russian

Annual Membership Options

Gain access to accredited Train the painter training materials and resources with an annual membership.

Registered Company	**Fee Per Annum: £1,250* per country**
• **Deliver the Train the painter programme to your workforce only** • Provide unlimited training across your workforce with no individual course fees for employees • Affordable and flexible • Demonstrate a commitment to high quality workmanship	
Affiliate Training Provider	**Fee Per Annum: £2,750* per country**
• **Open a Train the painter training centre and generate revenue through course delivery** • Assist in raising standards across the industry • Access to central marketing and sales resources	
Associate Company	**Fee Per Annum: £500**
Access to the training platform only	
Global Affiliate Training Provider	**Fee Per Annum: £25,000**
Unrestricted access and training opportunities globally	

* £250 joining fee is due upon initial registration.

Contact us: +44 (0)1252 732 236 ■ info@corrodere.com ■ corrodere.com

Training Equipment Requirements

Train the painter

TRAINER MUST:

- Ensure a risk analysis/assessment is available for the practical assessment.
- Ensure (when using coatings, solvents etc) that the products have been assessed and control measures are in place (COSHH or equivalent).
- Ensure students have the required PPE and RPE. If these cannot be provided, students must be informed prior to delivering the course so they bring their own.
- Ensure the plant and equipment are safe to use and (where applicable) tested/certified for use.
- Ensure the test plates are suitable as per the practical assessment guides (or the alternative live structure, if this meets the requirements).

Practicals (specific to individual task)	
Needle Gun	
Hard Wire Brush	
Mechanical Wire Brush (Spare Brush Heads)	
Disk Grinder/Rotary Grinder or Sander	
Scraper	
Chipping Hammer	
Compressed Air/Electrical Supply (as necessary)	
Heaters (if required)	
De-Humidification (if required)	
Lighting (Direct and In-Direct)	
Washing Unit (Variable Sizes)	
Steam Cleaner (if applicable)	
Solvent (Washing) Rags	
Blasting Equipment (Blast Post and Associated Equipment) – Variable Sizes Available	
Spraying Equipment (Spray Pump and Associated Equipment) – Variable Sizes Available	
Abrasives	
Paint/Solvents	
Abrasive Paper	
Blast Chamber/Cabinet (specialist blast cleaning module)	
Blast chamber allowing access for both the student and trainer (3m x 6m minimum)	
Spraying Facilities (specialist spray painting module)	
Spraying should be conducted in an environment suitable for the safe application of coatings, allowing access for both the student and trainer. This could be a spray booth (3m x 3m minimum) or a paint shop with suitable flooring, lighting and extraction.	

Contact us: +44 (0)1252 732 236 ■ info@corrodere.com ■ corrodere.com

Training Equipment Requirements

Panels	
Individual Panels for Protective Coatings Applicator	
Group Panels for Protective Coatings Applicator, Abrasive Blast Cleaner and Spray Painter	
Misc. Panels	

GROUP PANEL

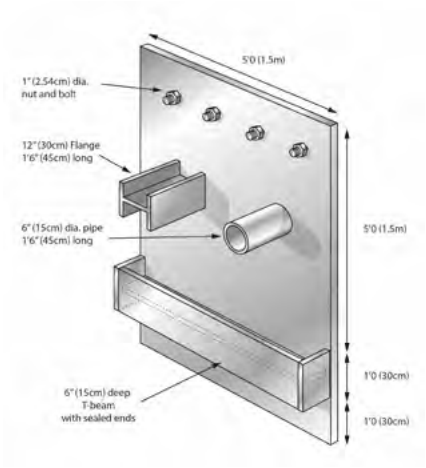

INDIVIDUAL PANEL

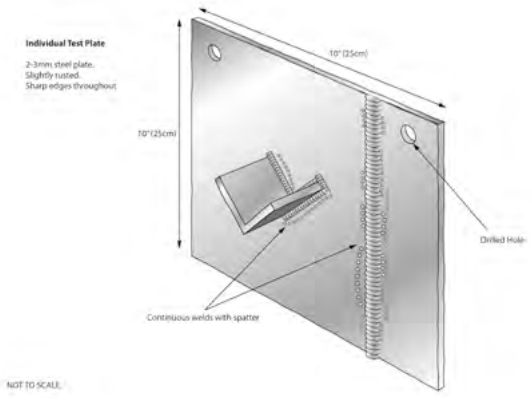

Theoretical	
Classroom must be a suitable size to accommodate the number of trainees attending the course	
A laptop/PC to access the training material	
Suitable audiovisual equipment, such as a projector with screen or individual trainee monitors	
A good surface for taking notes and for theoretical assessments	
Notepads and pens	
Adequate refreshments should be available throughout the duration of the course	
Lunch facilities	
Adequate parking available for the number of trainees attending	
Joining instructions, location of the training facility and access via public transport	
A list of local hotels and B&B's to suit all budgets should be provided with the joining instructions	
Toilet facilities	

Contact us: +44 (0)1252 732 236 ■ info@corrodere.com ■ corrodere.com

Practical Assessment Facilities Requirements

The practical assessment facilities must comply with all relevant Health and Safety Regulations. The facility must include suitable panels and provide adequate areas for both surface preparation, coating application & blasting.

PROTECTIVE COATINGS APPLICATION

The practical assessment is carried out using small, single-use panels. The assessment includes the following activities:

1. Mechanical cleaning of the panel surface
2. Application of protective coatings using a brush and roller

A typical facility layout includes individual workstations. Each workstation should be equipped with:

1. Compressed air supply
2. Electrical power
3. Adequate lighting
4. A workbench of sufficient size (1.5 metre width x 1 metre depth)

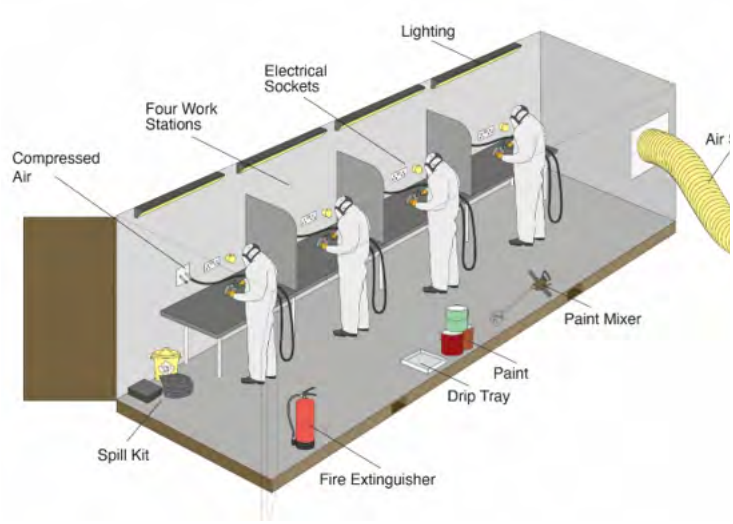

ABRASIVE BLAST CLEANING & SPRAY PAINTING

Both practical assessments are conducted on ASTM D4228 panels, ideally in an abrasive blast cleaning chamber that can also be used for spray painting. Alternatively, the blast-cleaned panels can be moved to a paint shop for the spray painting activity.

The Blast Chamber (or spray shop) should be equipped with:

1. Compressed air supply
2. Electrical power
3. Adequate lighting
4. Approx. 2m perimeter around the panel

An example of the blast chamber and panel:

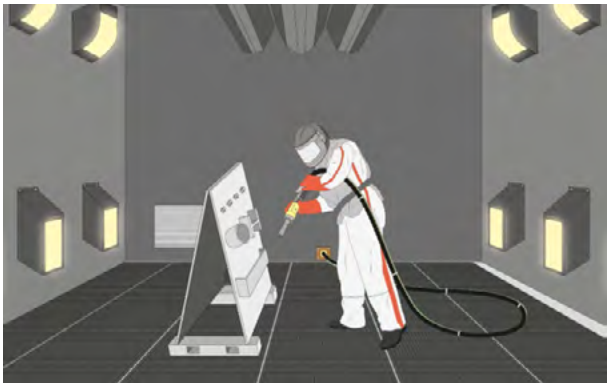

Note: Fire extinguishers, spill kits, paint mixing equipment and drip trays etc. are also required for the preparation and application of coatings to the ASTM D4228 panel.

VENTILATION & EXTRACTION

Appropriate extraction and ventilation systems must be installed to remove fumes and airborne contaminants produced during surface preparation and coating activities. The extraction requirements should be calculated individually for each facility, taking into account factors such as:

- Workspace size
- Number of workstations
- Type of coatings used
- Airflow requirements for safe operation

Contact us: +44 (0)1252 732 236 ■ info@corrodere.com ■ corrodere.com

Train the Trainer

The accredited Train the painter programme must be delivered by an Approved Trainer.

1. Select a suitable in-house candidate to become an Approved Trainer and deliver the Train the painter programme.
2. Pre-requisite: Level 2 Coating Inspection Certificate or a minimum of 5 years' experience as a Coating Applicator, Supervisor, Manager or Inspector.

Train the Trainer course: Available in person or online across all time zones.

AGENDA

DAY 1

- Registration
- Introduction and Objectives of the Course
- Opening a Training Session
- Understanding Your Students
- Communication Skills for Training
- Questioning Skills for Trainers
- Listening Skills for Trainers
- Presentation Skills in Training
- Encouraging Participation in Training
- Managing Questions and Answers
- Dealing with Difficult Trainees
- Health & Safety and Delivery of the Train the painter Practical Training Element
- Preparing Day 2 Presentations with the Trainer

DAY 2

- Overview of Day 1
- Online Platform Presentation, including all Modules
- Online Training Platform Functionality and Documentation
- Feedback
- Q&A

Contact us: +44 (0)1252 732 236 ■ info@corrodere.com ■ corrodere.com

Accredited Courses Available

The theoretical syllabus of all Train the painter accredited courses are available **online** through the training platform or delivered by an approved Trainer in the **classroom**.

All courses have a practical element.

All courses must be delivered by an Approved Trainer.

CORE COURSES

MANDATORY

Course	Course Content	Theory Duration Days/Hours	Practical Training (Max. 8 Students)	Approved By
Protective Coating Application	• Health and Safety • Access, Plant and Equipment • Surface Preparation • Coating Types • Coating Application • Quality Control	4 Days 32 Hours	1 Day	CSCS Lloyd's Register
Spray Painting	• Health and Safety • Paint Materials • Airless Spray Equipment • Conventional Air Spray • Plural Component Spray	1 Day 8 Hours	1 Day	CSCS Lloyd's Register
Abrasive Blast Cleaning	• Health and Safety • Blast Media • Standards and Quality Control • Operational Procedures • Process Control	2 Days 16 Hours	1 Day	CSCS Lloyd's Register

Contact us: +44 (0)1252 732 236 ■ info@corrodere.com ■ corrodere.com

Accredited Courses Available

Train the painter

SPECIALIST COURSES

Course	Course Content	Theory Duration Days/Hours	Practical Training (Max. 8 Students)	Approved By
Marine Coating Application	• Design and Types of Ships • Why we Paint Ships • Methods of Surface Preparation • On Board and Ballast Tank Maintenance • Marine Coating Systems and Dry Docking • How To Prepare and Line a Tank	1 Day 8 Hours	0	Lloyd's Register
Thin Film Intumescent Coating Application (with CSCS)	• Characteristics and Generic Types of Thin Film Intumescent Coatings • Product Literature, Training and Coating Application • Dry Film Thickness • Quality Control • Health and Safety • Inspection Equipment	2 Days 16 Hours	2 Days	bre ASFP
Thin Film Intumescent Coating Application (without CSCS)	• Characteristics & Generic Types of Thin Film Intumescent Coatings • Product Literature, Training and Coating Application • Dry Film Thickness • Quality Control • Health and Safety • Inspection Equipment	1 Day 8 Hours	2 Days	TSSEA
Thermal Metal Spraying Applicator	• Health and Safety • Pre Surface Preparation • Surface Preparation • Flame Spray • Arc Spray • Inspection of thermal metal spray • ISO 14918, ISO 2063	2 Day 8 Hours	1 Day	TSSEA
Powder Coating Application	• Introduction and Use • Formulation and Manufacturer • Surface Preparation and Application • Testing and Inspection • Health and Safety • Standards	2 Days 16 Hours	1 Day	BCF

Contact us: +44 (0)1252 732 236 ■ info@corrodere.com ■ corrodere.com

Online Course Delivery Model

1. The Trainer registers the student on the TTP website.
2. The Trainer selects the course for the student and decides whether they will study online or in the classroom.
3. Online students receive an automated email with details of how to log in.
4. The student logs in to complete all training, end-of-unit assessments and final theory exams. Access to the platform is available for 12 months.
5. The Trainer is notified by email once the student has completed the online training and assessments.
6. The Trainer invites the student to attend the practical training and assessments.
7. The Trainer uploads the practical results to the training platform and requests the appropriate TTP ID card.



Training Accreditations

Train the painter ID cards are requested directly from the training platform by Approved Trainers.

- Valid for 5 years
- Verifiable on the Corrodere Academy Student Directory
- Recognised Globally

TRAINEE ID CARD

- Less than 1600 hours' experience in Protective Coating Application
- Less than 800 hours' experience in Spray Painting
- Less than 800 hours' experience in Abrasive Blast Cleaning

TRAINEE ID CARD



TRAIN THE PAINTER ID CARDS

BRONZE CARD



SILVER CARD

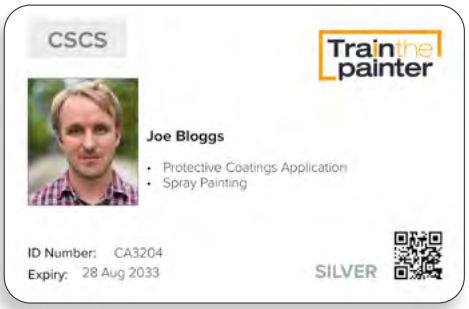

GOLD CARD



Contact us: +44 (0)1252 732 236 ■ info@corrodere.com ■ corrodere.com

QCA Certification

The QCA Certification programme has been written by industry experts and approved by Lloyd's Register to meet the growing demand within the protective coatings industry for independently assessed and certified coating applicator professionals.

BENEFITS

- **Industry Leadership** – Position your company as a pioneer and thought leader in quality and compliance.
- **Stronger Customer Trust** – Independent validation builds confidence with clients and stakeholders.
- **Enhanced Brand Reputation** – Demonstrate commitment to the highest industry standards and best practices.
- **Competitive Differentiation** – Stand out in the marketplace with a unique, verifiable point of difference.
- **Improved Operational Standards** – Certification often leads to better internal processes and greater consistency.
- **Faster Route to Tender Wins** – Meet procurement and compliance requirements with ease.

Contact us: +44 (0)1252 732 236 ■ info@corrodere.com ■ corrodere.com

QCA – P1
Protective Coating Application

PRE-JOB PREPARATION

- Safety Briefing
- Risk Assessment
- PPE/RPE selection
- Health and Safety Briefing

PANEL PREPARATION

- Check for Surface Contamination, Irregularities and Defects
- Hand/Power Tool Cleaning

PAINT/COATING PRODUCTS (PRE-APPLICATION)

- Product Data Sheets
- Correct PPE/RPE
- Mixing
- Environmental Conditions

PAINT/COATING PRODUCTS (APPLICATION)

- Brush and Roller Application Procedures according to the Product Data Sheet
- Good Working Practices

PAINT/COATING PRODUCTS (POST-APPLICATION)

- Clean-Up and Housekeeping

Contact us: +44 (0)1252 732 236 ■ info@corrodere.com ■ **corrodere.com**

QCA – A1
Abrasive Blast Cleaning

PRE-JOB PREPARATION

- Safety Briefing
- Risk Assessment
- PPE/RPE Selection
- Health and Safety Briefing

PANEL PREPARATION

- Test Panel for Surface Contamination, Irregularities and Defects

PRE-BLAST INSPECTION

- Equipment Set-Up and Associated Parts
- Power Requirements
- Abrasive Media
- Testing Abrasive Blast Cleaning Equipment
- Abrasive Blast Cleaning to Appropriate Standards
- Quality Control Tests on Prepared Plates
- Abrasive Blast Cleaning Equipment Clean-Up

Contact us: +44 (0)1252 732 236 ■ info@corrodere.com ■ **corrodere.com**

QCA – S1
Spray Painting

PRE-JOB PREPARATION

- Safety Briefing
- Risk Assessment
- PPE/RPE Selection
- Health and Safety Briefing

PANEL PREPARATION

- Test Panel for Surface Contamination, Irregularities and Defects
- Surface Preparation Standards

AIRLESS SPRAY EQUIPMENT SET UP

- Power and Equipment
- Equipment and Parts Safety Checks

PAINT/COATING PRODUCTS (PRE-APPLICATION)

- Product Data Sheets
- Correct PPE/RPE
- Mixing
- Environmental Conditions

USE OF AIRLESS SPRAY EQUIPMENT

- Application of Specific Products
- Film Thickness
- Correct Application Finish
- Equipment Shutdown

AIRLESS SPRAY EQUIPMENT

- Equipment Clean-Up
- General Housekeeping

Contact us: +44 (0)1252 732 236 ■ info@corrodere.com ■ **corrodere.com**

QCA – T1
Thin Film Intumescent Application

PRE-JOB PREPARATION

- Safety Briefing
- Risk Assessment
- PPE/RPE Selection
- Health and Safety Briefing

PANEL PREPARATION

- Test Panel for Surface Contamination (Steel/Primer)
- Steel Irregularities and Defects
- Surface Preparation Standards (Steel Only – Clean Primer)

AIRLESS SPRAY EQUIPMENT SET UP

- Power and Equipment
- Equipment and Parts Safety Checks

THIN FILM INTUMESCENT PRODUCTS (PRE-APPLICATION)

- Product Data Sheets
- Correct PPE/RPE
- Mixing
- Environmental Conditions

USE OF AIRLESS SPRAY EQUIPMENT AND APPLICATION OF THE THIN FILM INTUMESCENT COATING

- Application of Specific Products
- Film Thickness (Wet and Dry)
- Correct Application Finish
- Equipment Shutdown

AIRLESS SPRAY EQUIPMENT

- Equipment Clean-Up
- General Housekeeping

Contact us: +44 (0)1252 732 236 ■ info@corrodere.com ■ corrodere.com

Encouraging New Talent into the Industry

Designed to cultivate new talent within the industrial coatings industry, we are proud to introduce the **Industrial Coating Applicator Skills Development Programme**. Drawing on our industry guidance, expertise and experience, the programme supports Approved Trainers in mentoring and developing trainees, helping to ensure they have the Health and Safety knowledge and practical competence required as they enter the industry.

QUALIFICATIONS INCLUDE:

(see page 9 for details)

- Protective Coatings Application
- Abrasive Blast Cleaning
- Spray Painting

Trainers have access to our Logbook App to streamline and monitor all experience gained.



Price Guide

Train The Painter Membership Fees	Joining Fee	Annual Fee	Total
Affiliate	£250	£2750	£3000
Registered Company	£250	£1250	£1500
Associate Company			£500

Train the painter Certification Fees	
Bronze / Renewal	£110
Silver / Renewal	£165
Gold / Renewal	£220
Upgrade from Bronze to Silver	£55
Upgrade from Silver to Gold	£55
Upgrade from Bronze to Gold	£110
Specialist Course Certification Fees	
Marine Coating Application	£125
Thermal Metal Spray	£125
Thin Film Intumescent with CSCS	£175
Thin Film Intumescent without CSCS	£125
Thermal Metal Spraying Applicator	£125
Powder Coating Application	£110
Additional Course and Fees	
Supervisor Course	£750
Supervisor Renewal	£165
Train the Trainer	£750
Transition – Trainer	£375
Trainer Renewal	£275
Audit	£300 – £750

Contact us: +44 (0)1252 732 236 ■ info@corrodere.com ■ corrodere.com

Apps

LOGBOOK APP

Train the painter registered companies, Supervisors and Trainees have access to our Logbook App, providing a simple way to track Trainee progress and task hours.

For instructions on how to use the app, refer to our Logbook App Guide or click here.

Please click on the link below from your smartphone/tablet or search for 'TTP Log Book' on the App Store or Google play to install.

Available on the App Store

GET IT ON Google Play

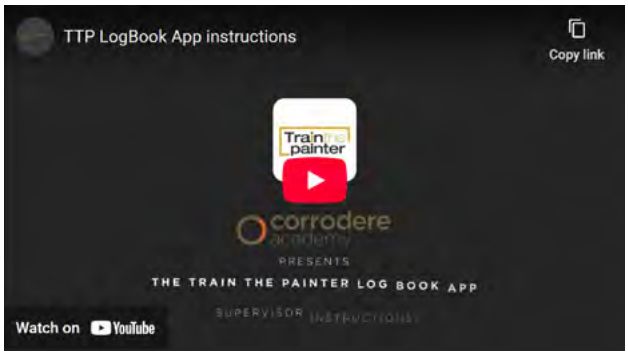

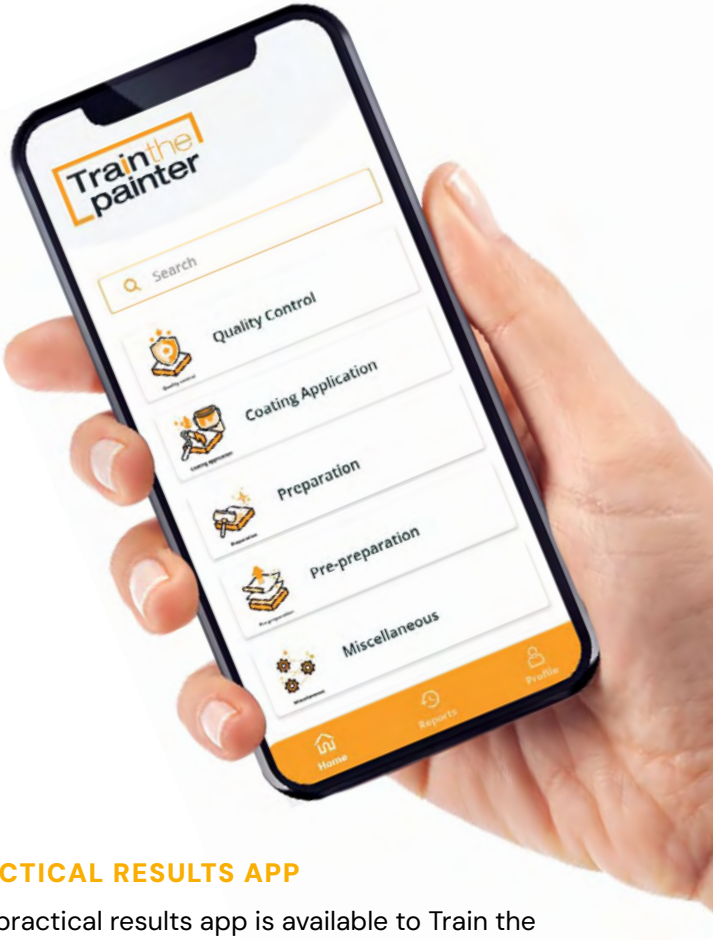

PRACTICAL RESULTS APP

The practical results app is available to Train the painter Approved Trainers to conduct and log practical assessments.

For instructions on how to use the app, click here.

Please click on the link below from your smartphone/tablet or search for 'Practical Results' on the App Store or Google play to install.

Available on the App Store

GET IT ON Google Play

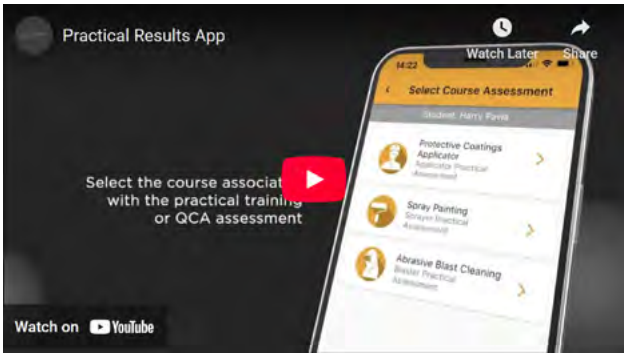

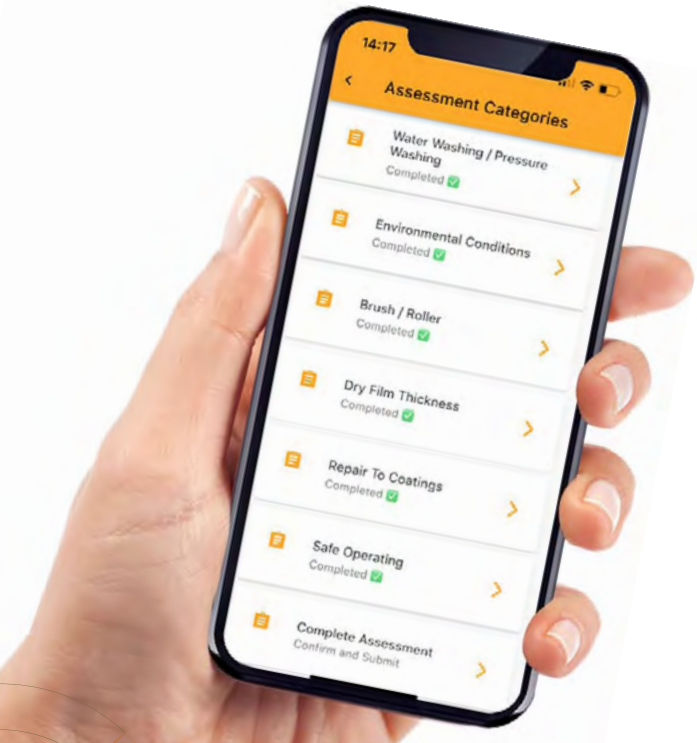

Contact us: +44 (0)1252 732 236 ■ info@corrodere.com ■ corrodere.com

Marketing Toolbox

This Marketing Toolbox helps you promote training with Train the painter and your own branding. It includes customisable posters, banners, and social media posts featuring your logo ready to use online or offline.

A3 POSTERS X 4

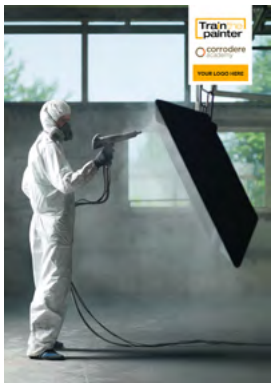







A5 LEAFLET





ROLLER BANNER



SOCIAL MEDIA POSTS (2 EXAMPLES HERE)





Marketing Toolbox

PEN



MUG



NOTEBOOK



T-SHIRT



BEANIE HAT



CAP



BUMPER STICKER



Contact us: +44 (0)1252 732 236 ■ info@corrodere.com ■ corrodere.com

Corrodere Limited,
Peel House, Upper South View,
Farnham, Surrey, GU9 7JN
+44 (0) 1252 732236
info@corrodere.com
corrodere.com

7563 TTP Delivery Model 0826

corrodere academy